PL27 Series

200 A 600 V; polyphase

Product specifications

- Conductor range: 6 AWG–250 kcmil
- Tunnel type connector for both load and line sides
- For overhead and combination overhead/ underground service
- Larger hub opening requires use of 3 in., 3½ in. or 4 in. hubs unless BS052 adapter plate is used
- Supplied with screw type ring
- Weatherproof Type 3R enclosure

Approved for copper or aluminum

PL27-INTCV

Cat. no.	Description	Dimensions (in.) H	W	D	Weight each lb	kg
7 Jaw						
PL27-V	Overhead hub opening	20⅛	12	5 7/16	18	8.1
PL27-TCV	Combination overhead-underground	20⅛	12	5 7/16	18	8.1
PL27-INV	Overhead hub opening, insulated neutral	20⅛	12	5 7/16	18	8.1
PL27-INTCV	Combination overhead-underground, insulated neutral	20⅛	12	5 7/16	18	8.1
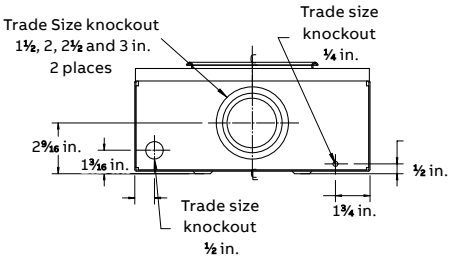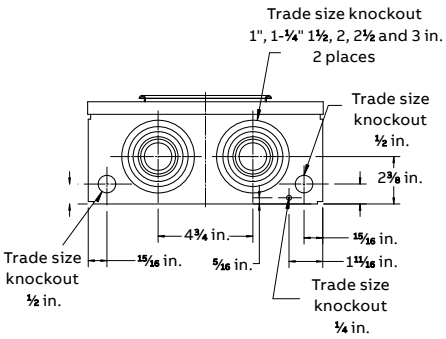
Diagrams